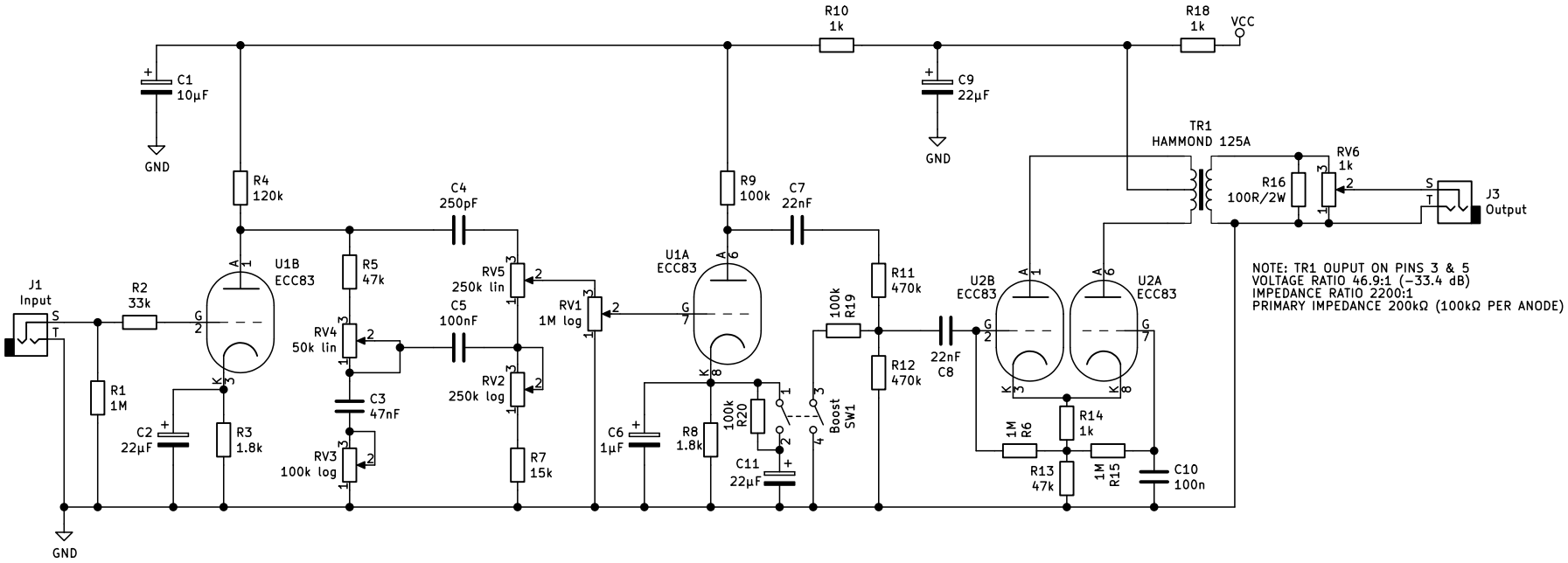

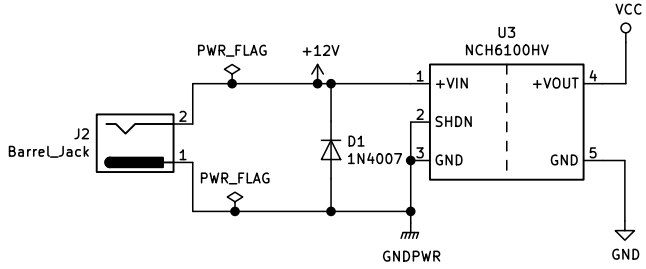

Stompbox G5

Team G5
http://www.projetg5.com

Sheet: /
File: préampli_G5.sch

Title: Préampli G5 – Stompbox

Size: A4	Date: 2019-02-27	**Rev: beta4**
KiCad E.D.A. kicad 5.0.2+dfsg1-1		Id: 1/1