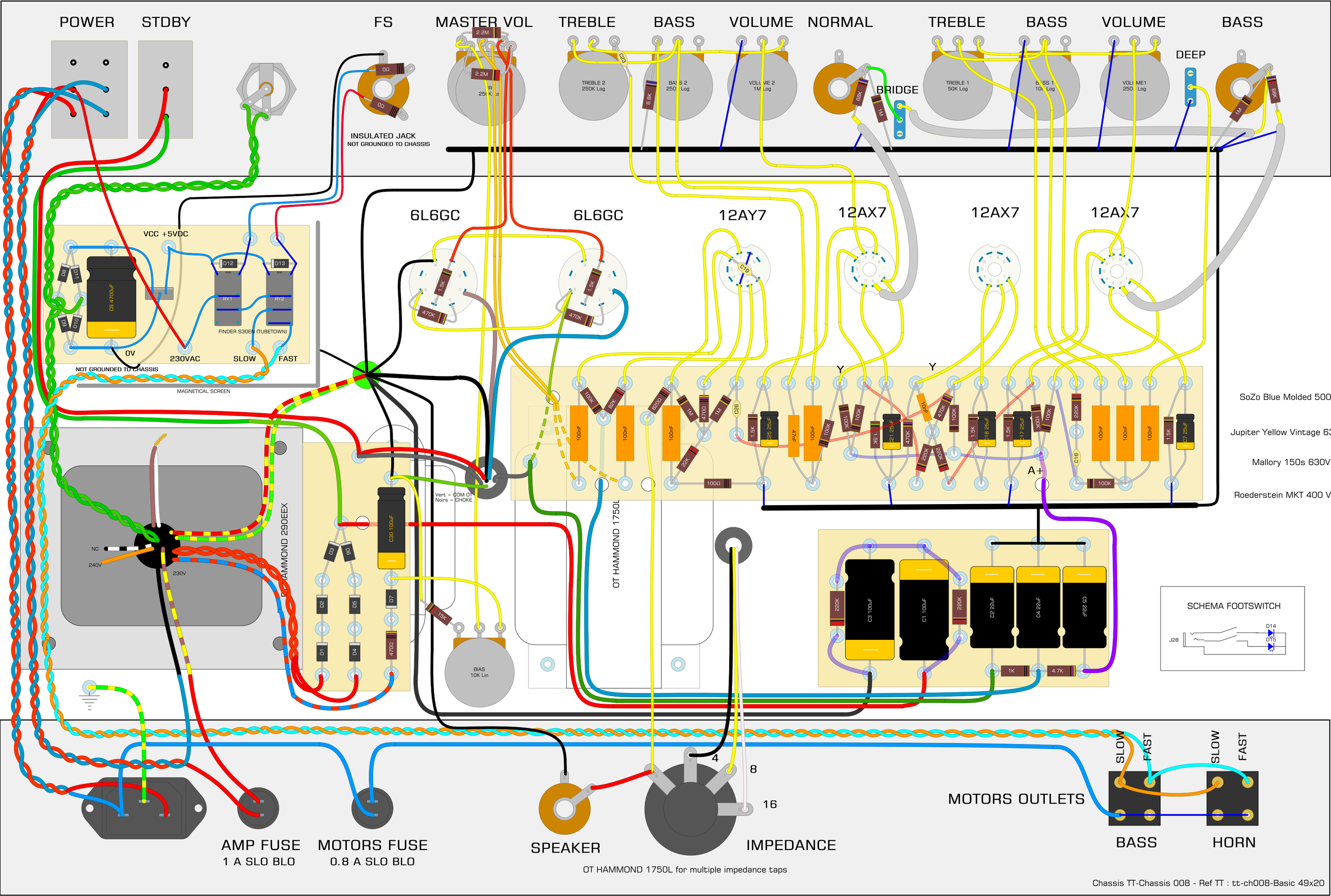
POWER
STDBY
FS
MASTER VOL
TREBLE
BASS
VOLUME
NORMAL
TREBLE
BASS
VOLUME
BASS
DEEP
BRIDGE
INSULATED JACK
NOT GROUNDED TO CHASSIS
TREBLE 2
250K Log
BASS 2
250K Log
VOLUME 2
1M Log
TREBLE 1
50K Log
BASS 1
100K Log
VOLUME1
250K Log
6L6GC
6L6GC
12AY7
12AX7
12AX7
12AX7
VCC +5VDC
FINDER S30EN (TUBETOWN)
0V
230VAC
SLOW
FAST
NOT GROUNDED TO CHASSIS
MAGNETICAL SCREEN
HAMMOND 290EEX
NC
240V
230V
Vert = COM OT
Noirs = CHOKE
OT HAMMOND 1750L
BIAS
10K Lin
A+
SoZo Blue Molded 500
Jupiter Yellow Vintage 63
Mallory 150s 630V
Roederstein MKT 400 V
SCHEMA FOOTSWITCH
J28
D14
D15
AMP FUSE
1 A SLO BLO
MOTORS FUSE
0.8 A SLO BLO
SPEAKER
4
8
16
IMPEDANCE
OT HAMMOND 1750L for multiple impedance taps
MOTORS OUTLETS
SLOW
FAST
SLOW
FAST
BASS
HORN
Chassis TT-Chassis 008 - Ref TT : tt-ch008-Basic 49x20