Modulus '69 Small Box Plexi Kit

with standard grounding

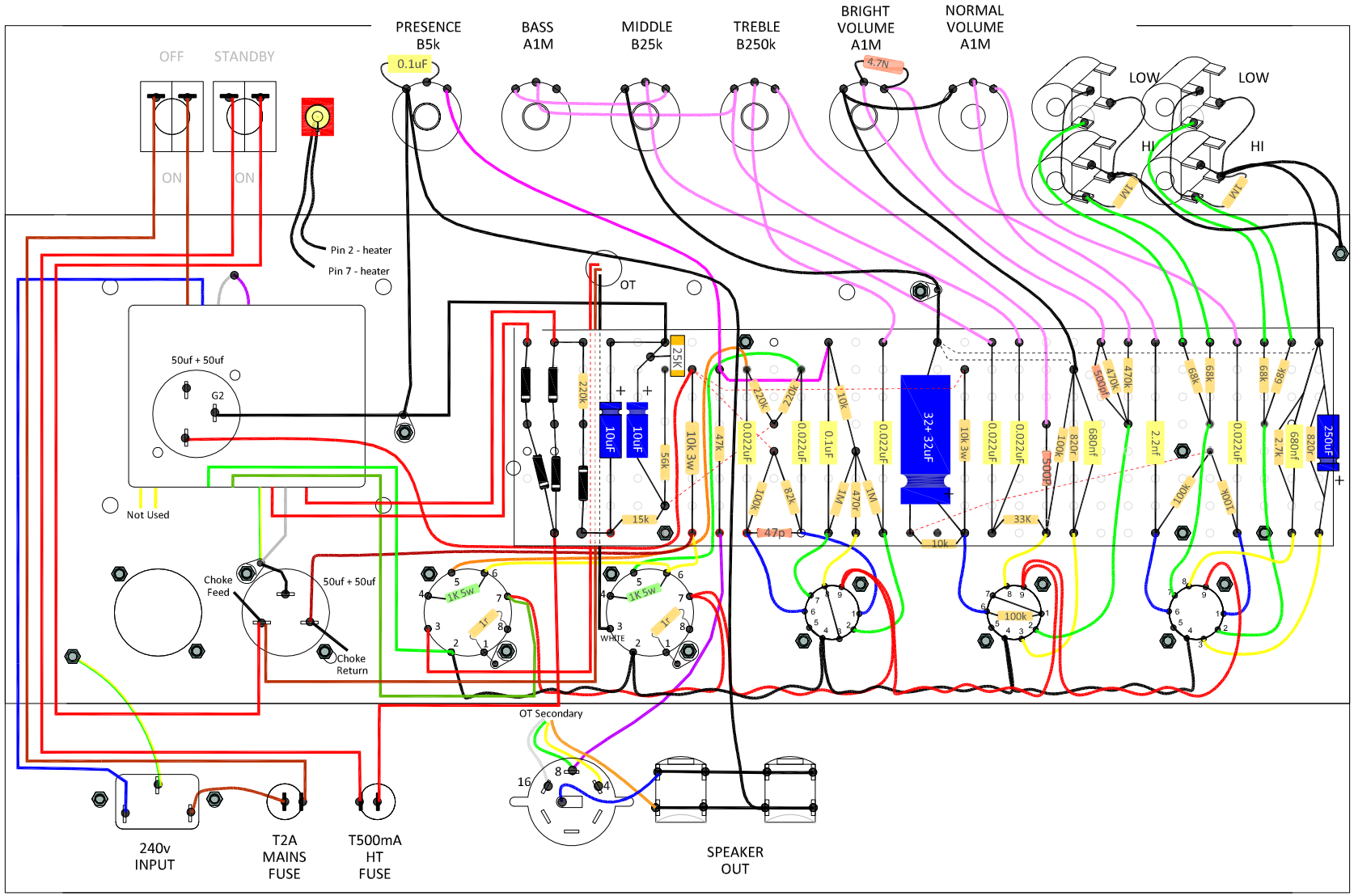

NOTES:

Cable Routing

-Cables shown twisted must be twisted together to reduce AC hum, the more uniform the twist the better.

-Keep the wires close to the chassis and following the routing shown closely, keeping wire length short also helps reduce unwanted noise.

- Connections on the Toggle Switches should be heat shrinked for safety.

Safety Ground:

- The Green/Yellow Mains wire must be mounted on a dedicated screw with lock nut or lock washer, do not mount this connection on a transformer bolt.

- The Green/Yellow wire should be longer than the Brown and Blue mains wire to ensure it stays connected if the mains cable is pulled on.

Circuit Ground:

-This layout grounds the circuit to the chassis at various points similar to the vintage layout, this should provide a quiet amp, however there are better ways to connect the grounds, please contact us if you want this information.

WARNING!

Valve Amplifiers have lethally high internal voltages, Filter capacitors store a charge that can cause electrocution even when the amp is off and unplugged.

IMPORTANT - DISCLAIMER

-Valve Amplifiers have lethally high internal voltages, As such the Plexi 45 amp kit should only be built by a competent person or under the direct supervision of a competent person.

-This layout is not a step by step build guide.

-Using this layout does NOT result in a CE compliant amplifier that can be sold without restriction in the European Community.

REV 01