PP reverb cathodes bias

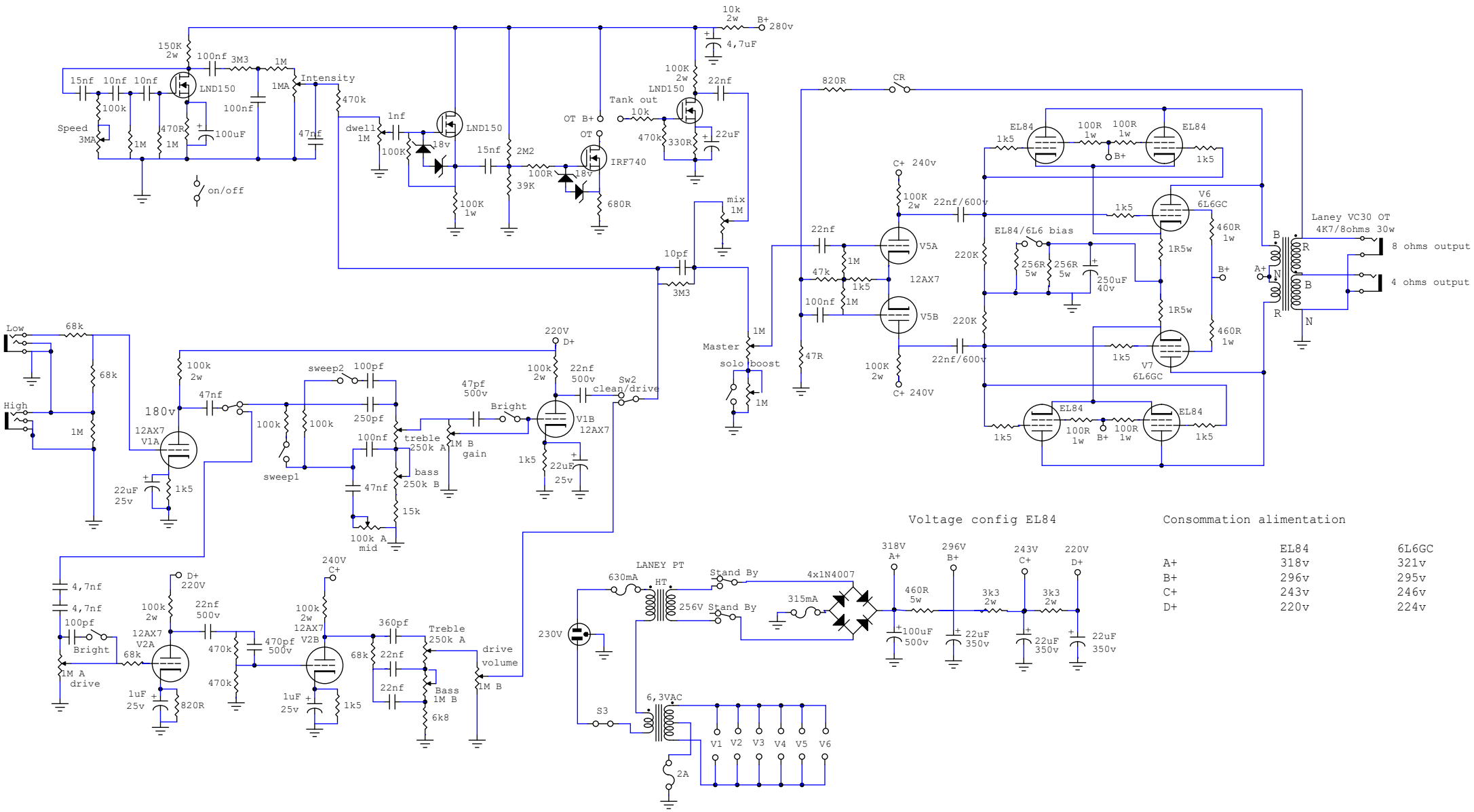

Voltage config EL84

Consommation alimentation

	EL84	6L6GC
A+	318v	321v
B+	296v	295v
C+	243v	246v
D+	220v	224v