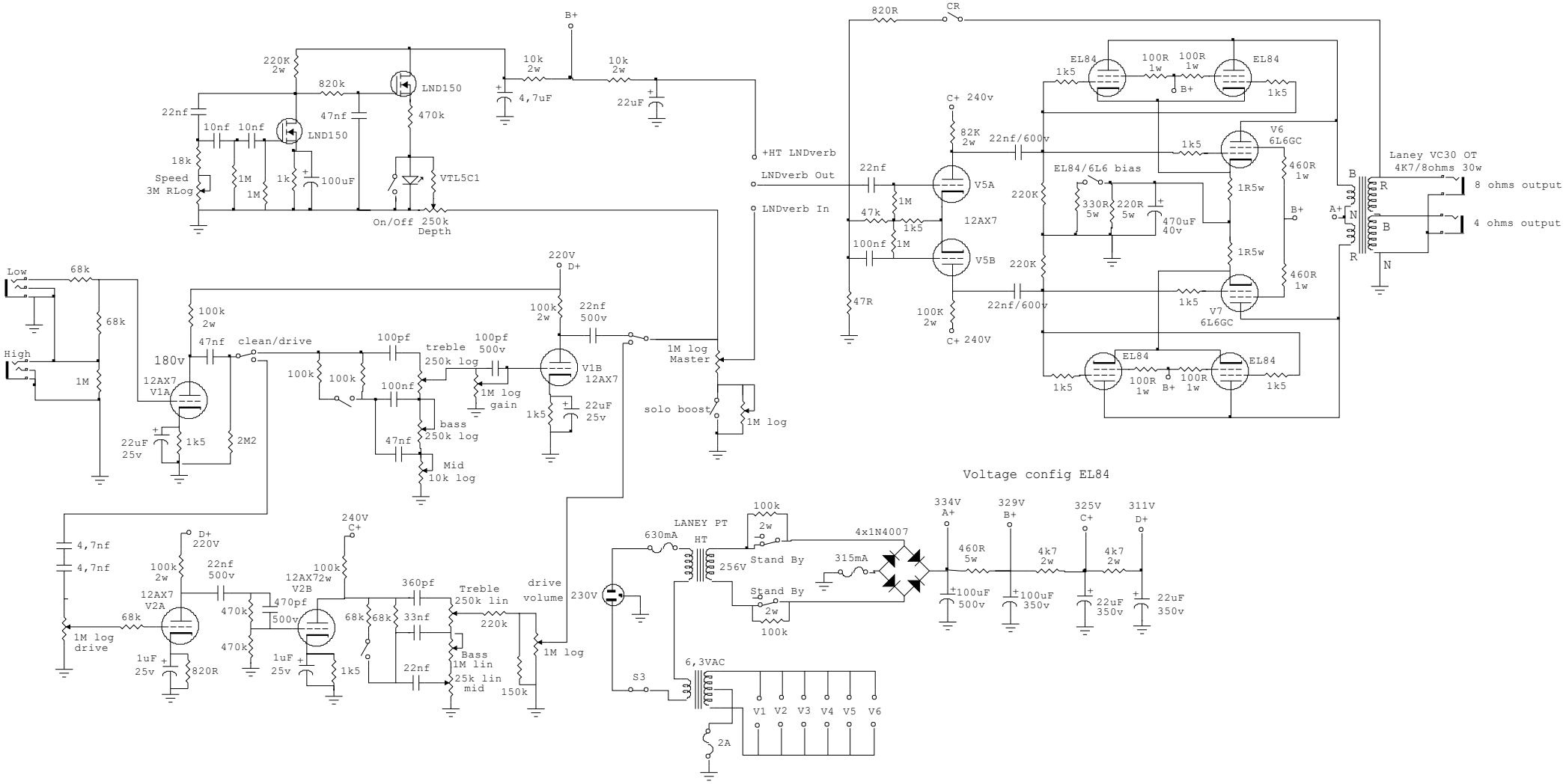PP reverb cathodes bias